DA4-L

DALI

4 Channel Constant Voltage DALI LED Dimmer

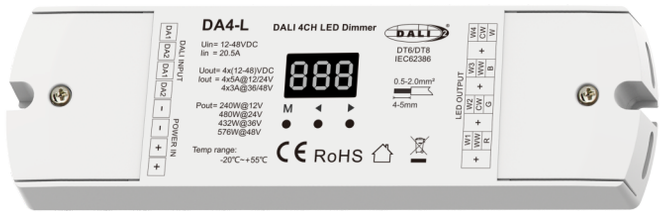

DALI 2 CE RoHS

Features

- 4 channel constant voltage DALI LED Dimmer with digital display, 5A per channel.
- Support 1-4 DALI address, 4 channel work separately.
- DALI-2 certified, in accordance with DALI standard protocol IEC 62386-102, IEC 62386-207, IEC 62386-209 and in compliance with DALI products from other international incorporation.
- DALI address can be manually assigned and shown in digital display or automatically assigned by DALI master.
- Connect with external AC push switch to achieve on/off, brightness, color temperature and RGB color adjustment.
- PWM digital dimming, standard DALI logarithmic dimming curve.
- PWM frequency 1000/2000/4000/8000/16000Hz selectable.
- Over-heat / Over-load / Short circuit protection, recover automatically.
- With fast self-testing function.

Technical Parameters

Input and Output	
Input voltage	12-48VDC
Input current	20.5A
Output voltage	12-48VDC
Output current	4 x 5A@12/24V 4 x 3A@36/48V
Output power	4 x 60W@12V 4 x 120W@24V 4 x 108W@36V 4 x 144W@48V
Output type	Constant voltage

Dimming data	
Input signal	DALI
Dimming range	0-100%
Dimming curve	
PWM frequency	1K/2K(default)/ 4K/8K/16KHz

Warranty and Protection	
Warranty	5 years
Protection	Over-load, Over-heat, Short circuit

Safety and EMC	
EMC standard	EN IEC 55015/ EN IEC 61547
Safety standard	EN 61347-1/-2
Certification	CE RoHS DALI-2

Environment	
Operating temperature	Ta: -20°C ~ +55°C
Case temperature (Max.)	Tc: +85°C
IP rating	IP20

Package	
Size	L175 x W54 x H27mm
Gross weight	0.145kg

Mechanical Structures and Installations

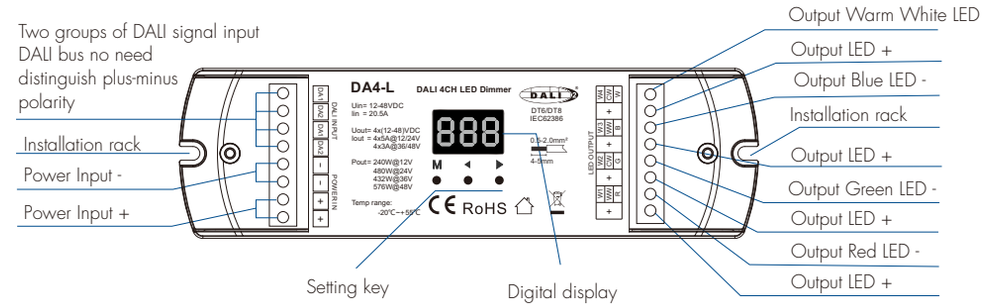

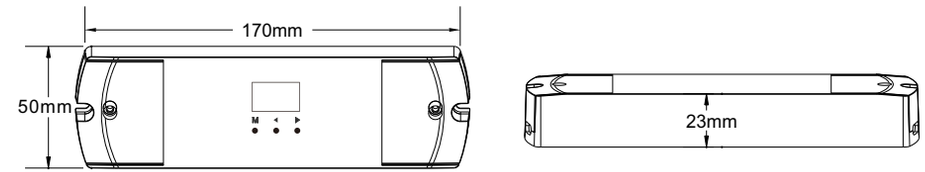

Wiring Diagram

- Apply to single color dimming (1CH, 2CH, 3CH, 4CH)

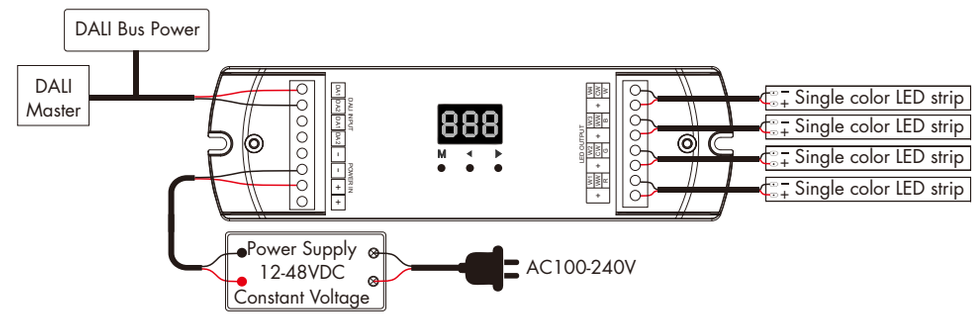

- Apply to color temperature dimming (C-2)

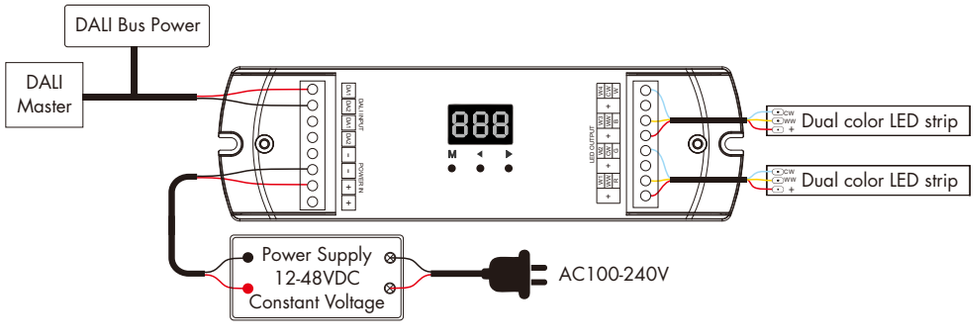

- Apply to RGB dimming (C-3)

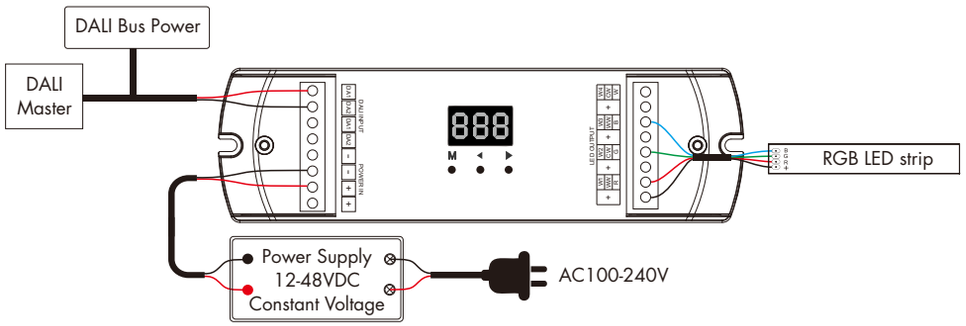

- Apply to RGBW dimming (C-4)

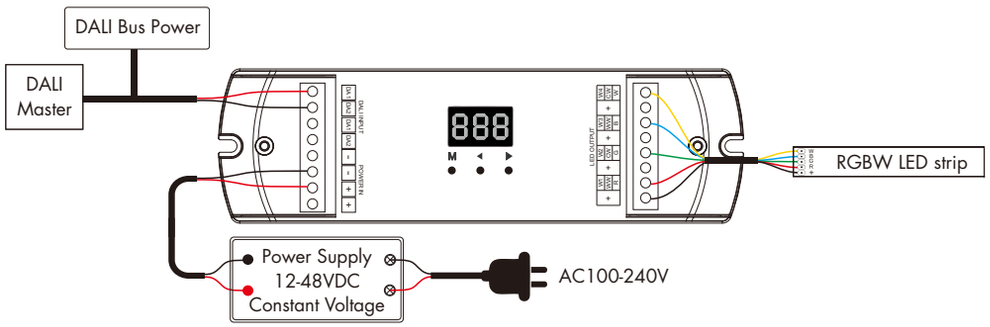

Note: When display OLA, overload alarm. When display OHA, overheat alarm.

Light Type Setting

- When using it for the first time, please set the light type according to the application.
- Long press M button for 2s, to prepare for setting the light type, the digital display flashes.
- Short press the ◀ or ▶ button to switch the single color ("1CH/2CH/3CH/4CH"), dual color ("C-2"), RGB ("C-3") or RGBW ("C-4") light type.
- Short press the M button or timeout for 10 seconds to exit the light type setting.

Light type setting instructions:

- When set "1CH" type, DT6 dimming, the dimmer occupy 1 DALI address, CH1, CH2, CH3, CH4 will be the same DALI address, 4-channel output is the same.

DT6, 1CH

- When set "2CH" type, DT6 dimming, the dimmer occupy 2 DALI address, CH1, CH3 will be same DALI address A, CH2,CH4 will be same DALI address A+1.

DT6, 2CH

- When set "3CH" type, DT6 dimming, the dimmer occupy 3 DALI address, CH1 will be DALI address A, CH2 will be DALI address A+1, CH3 will be DALI address A+2, CH4 no DALI address and no output.

DT6, 3CH

- When set "4CH" type, DT6 dimming, the dimmer occupy 4 DALI address, CH1 will be DALI address A, CH2 will be DALI address A+1, CH3 will be DALI address A+2, CH4 will be DALI address A+3.

DT6, 4CH

- When set "C-2" type, DT8-TC dimming, the dimmer occupy 1 DALI address, CH1 and CH3 synchronized output WW (warm white), CH2 and CH4 synchronized output CW (cool white).

DT8-TC

- When set "C-3" type, DT8-RGB dimming, the dimmer occupy 1 DALI address, the 4th channel does not output.

DT8-RGB

- When set "C-4" type, DT8-RGBW dimming, the dimmer occupy 1 DALI address, 4 channels are output independently.

DT8-RGBW

For example, the start DALI address is 32:
When set "1CH" type, the dimmer occupy 1 DALI address and address is 32.
When set "2CH" type, the dimmer occupy 2 DALI addresses and address is 32,33.
When set "3CH" type, the dimmer occupy 3 DALI addresses and address is 32,33,34.
When set "4CH" type, the dimmer occupy 4 DALI addresses and address is 32,33,34,35.
When set "C-2" type, the dimmer occupy 1 DALI address and address is 32.
When set "C-3" type, the dimmer occupy 1 DALI address and address is 32.
When set "C-4" type, the dimmer occupy 1 DALI address and address is 32.

Set DALI Address

Set DALI Address via buttons

- Long press ◀ or ▶ button for 2s, prepare for set the start DALI address, then press ◀ or ▶ button to set the start DALI address.
- Short press M button or timeout 10s, quit start DALI address setting.
- The start DALI address can be manually assigned from 00-63-FF.
- By factory defaults, no DALI address is assigned for the dimmer, and digital display shows "AFF".

DALI address assigned by DALI masters

- DALI address can also be assigned by DALI Master controller automatically.
  Please refer to user manuals of compatible DALI Masters for specific operations.
- The digital display will show "AAU" When the DALI master is assigning address.
- After address is assigned, the digital display will show the DALI address"Axx", xx is from 00 to 63.
- For the DT6 2/3/4 channel dimming type, the dimmer occupies 2/3/4 DALI addresses,
  use the DALI master assigning address may result in discontinuous addresses,
  then the digital display will show the DALI start address "Uxx".

Set PWM Frequency

- Long press M & ◀ button for 2s to enter PWM frequency setting.
- Short press ◀ or ▶ button to switch between 1000Hz("F10"), 2000Hz("F20"), 4000Hz("F40"), 8000Hz("F80") or 16000Hz("FA0").
  Higher PWM frequency, will cause lower output current, higher power noise, but more suitable for camera (No flickers for video).
- Short press M button or 10s without operation, exit system parameter setting.

Set Open-circuit Detection

- Long press M button, ◀ and ▶ button simultaneously for 2s, prepare for setting open-circuit detection, digital display start flashes.
- Short press ◀ or ▶ button to switch between enabling open-circuit detection ('HoN') or disabling open-circuit detection ('HoF').
- Short press M key or timeout 10s, quit the open-circuit detection setup.

Restore Factory Default Parameter

- Long press ◀ and ▶ button for 2s, restore factory default parameter, display "RES".
- Factory default parameter: no DALI address is assigned, DT6 four channel dimming, PWM frequency is 2000Hz,
  open-circuit detection is turned off.
- Long press M and ▶ button for 2s, enter fast self-testing, the four output channels will be on orderly then all on.

Safety & Warnings

- DO NOT install with power applied to device.
- DO NOT expose the device to moisture.