DH-C

DALI Relay Switch

DALI

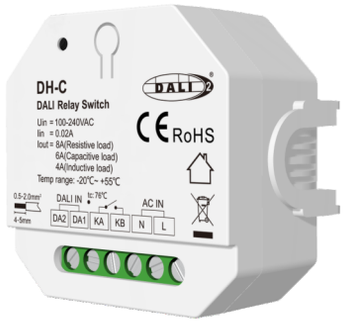

DALI 2 CE RoHS

Features

- 1 DALI address, 1 channel 8A dry contact mains rated relay output.
- Powered by AC100-240V.
- DALI-2 certified, in accordance with DALI standard protocol IEC 62386 and in compliance with DALI products from other international incorporation.
- Compliant DALI device type 7 (DT7) .
- High-inrush specification relays (single pole, normally open).
- Connect with external push switch to achieve on/off function.
- Zero cross switching function.

Technical Parameters

Input and Output		
Input voltage		100-240VAC
Input current		0.02A
Output voltage		100-240VAC; 12-48VDC
Relay contacts		single-pole, single-throw (SPST) relay
Max relay load current		8A Resistive load 6A Capacitive load 4A Inductive load 4A DC load
Max relay load power	Resistive load:	1920W@240VAC 800W@100VAC
	Capacitive load:	1440W@240VAC 600W@100VAC
	Inductive load:	960W@240VAC 400W@100VAC
	DC load:	192W@48VDC 48W@12VDC

Environment	
Operation temperature	Ta: -20°C ~ +55°C
Case temperature (Max.)	Tc: 76°C
IP rating	IP20

Package	
Size	L60 x W60 x H40mm
Gross weight	0.06kg

Safety and EMC	
EMC standard	EN IEC 55015/ EN IEC 61547 EN IEC 61000-3-2/ EN IEC 61000-3-3
Safety standard	EN 61347-1/-2
Certification	CE RoHS DALI-2

Warranty and Protection	
Warranty	5 years
Protection	Over-Temperature Protection

Mechanical Structures and Installations

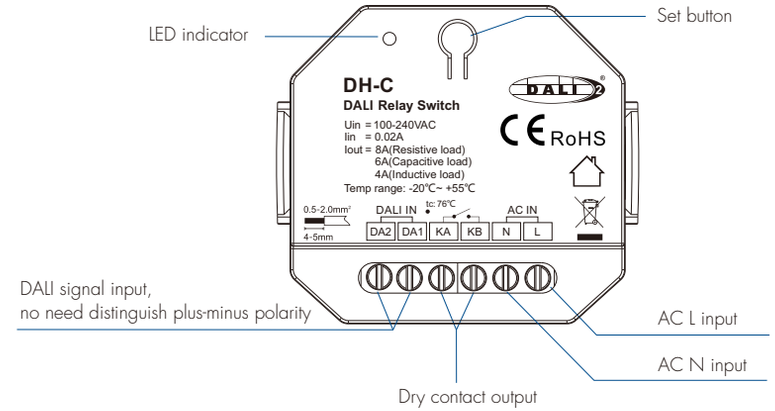

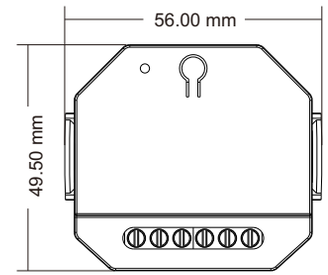

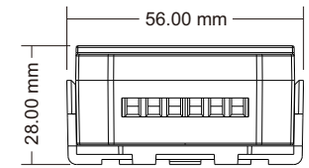

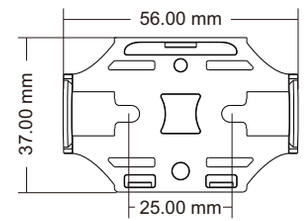

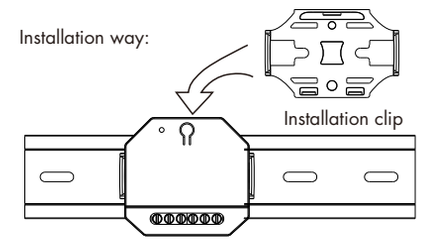

Wiring Diagram

Caution:

1. Please carefully ensure all wire connections and polarities are correct and secure before applying power, otherwise this controller will be damaged.
2. DO NOT install with power applied to device.
3. DO NOT expose the device to moisture.

- DH-C connect with DALI master

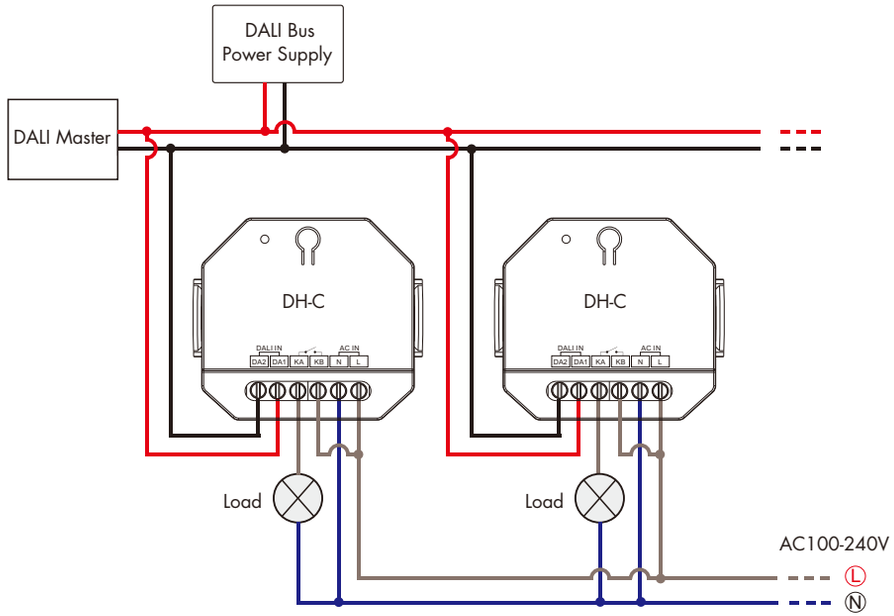

- DH-C connect with AC push switch

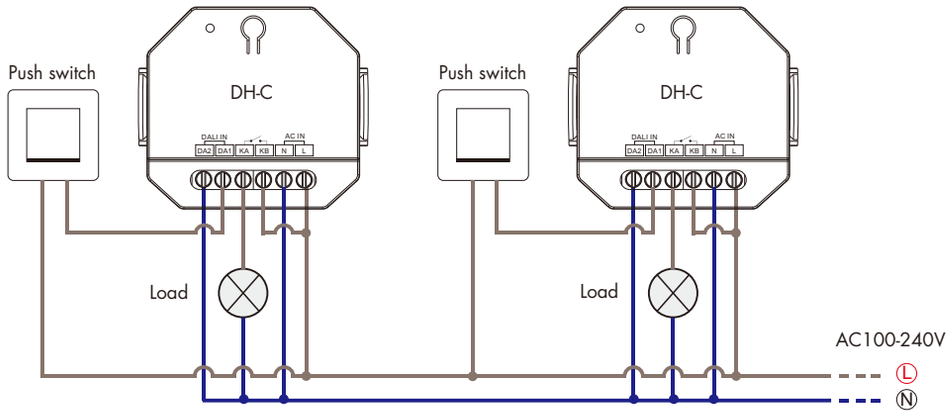

Note:
1. DALI interface and AC PUSH interface are compatible, DALI and AC PUSH can only be connected to one, not at the same time.
2. When connecting to the AC PUSH switch, note that the re wire (L) and zero wire (N) are connected to DA1 and DA2 respectively, and cannot be connected to DA1 or DA2 at the same time.
3. We recommend the number of relay switch connected to a push switch does not exceed 25 pieces, the maximum length of the wires from push to relay switch should be no more than 20 meters.

- DH-C connect with 12-48VDC load

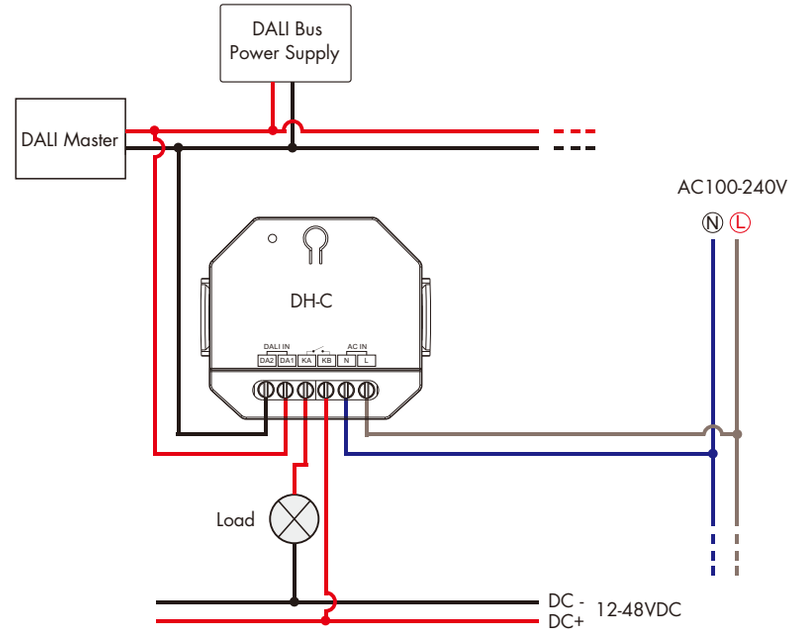

Operation

1. DALI switch

DALI signal port connect with DALI Master controller
DALI address can be assigned by DALI Master controller automatically.
Please refer to user manuals of compatible DALI Masters for specific operations.

2. Push switch

DALI signal port connect with push switch.
Short press: Turn on or off light.
Long press 10s: Synchronizes multiple relay switch connected to the same push switch to the on state.

3. Set button

Short press: Turn on or off light.
Long press 10s: The relay switch is restored to its factory default state, the relay switch is on and the DALI address is not assigned.

4. LED indicator status

When the relay switch is working normally, the LED indicator light is blue.
When the relay switch receives DALI signal, the LED indicator light flashes once.