DT-C

DALI AC Triac Dimmer

DALI+ Triac

Features

- AC phase-cut DALI dimmer, one DALI address, one channel output.
- To dim and switch single color dimmable LED lamps, traditional incandescent and halogen lights.
- DALI-2 certified, in accordance with DALI standard protocol IEC 62386 and in compliance with DALI products from other international incorporation.
- DALI address can be automatically assigned by DALI master.
- Leading edge dimming or trailing edge dimming selectable.
- The minimum brightness is adjustable.
- Connect with external push switch to achieve on/off and 0-100% dimming function.
- Over-heat protection, overload protection, recover automatically.

DALI 2 CE RoHS

Technical Parameters

Input and Output	
Input voltage	100-240VAC
Output voltage	100-240VAC
Input current	1.5A
Output current	1.5A
Output power	150-360W
Warranty and Protection	
Warranty	5 years
Protection	Over-heat,Over-load

Dimming date	
Input signal	DALI, AC Push
Dimming level	256 level
Dimming range	0-100%
Environment	
Operation temperature	Ta: -20°C ~ +55°C
Case temperature (Max.)	Tc: +85°C
IP rating	IP20

Safety and EMC	
EMC standard	EN IEC 55015/ EN IEC 61547-1/-2 ETSI EN 301 489-1/-17
Safety standard	EN 61347-1/-2
Certification	CE RoHS DALI-2
Package	
Size	L60 x W60 x H40mm
Gross weight	0.059kg

Compatible Load Types

Load type	Maximum load	Remarks
Dimmable LED lamps	200W @ 220V 100W @ 110V	Due to variety of LED lamp designs, maximum number of LED lamps is further dependent on power factor result when connected to dimmer.
Triac dimmable LED drivers	200W @ 220V 100W @ 110V	Maximum permitted number of drivers is 200W divided by driver rated input power, and make sure the surge current is no more than 2 times 65A.
Incandescent lighting, HV halogen lamps	400W @ 220V 200W @ 110V	

Because different manufacturers triac dimmable LED driver rated input power is different, you can refer to the formula to calculate the max. number of LED driver. Formula: D max = 200W/RP, at the same time need to meet the sum of the surge current (I_{surge}) does not exceed 130A.
For example: triac dimmable LED driver rated input power(RP) =15.4W, surge current =10A/230VAC, Then D max= 200/15.4 =13(pcs), I_{surge}=13*10 =130A, the max. number of triac dimmable LED driver is 13.

Recommended Number of Load Connection

Load type	Output power per load	Quantity
Dimmable downlight	5.5W @ 220V~240V	20
Triac dimmable LED driver	12W @ 200V~240V	15
Triac dimmable LED driver	36W @ 200V~240V	4
Triac dimmable LED driver	75W @ 200V~240V	2

Mechanical Structures and Installations

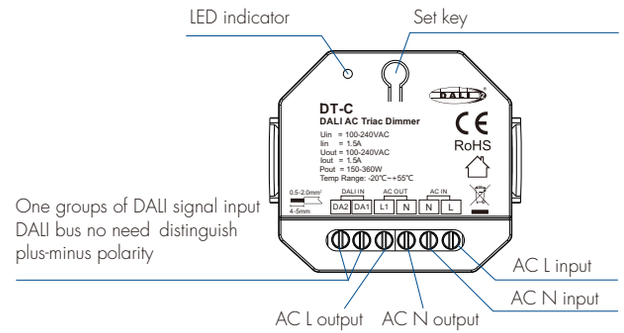

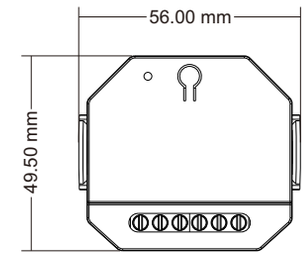

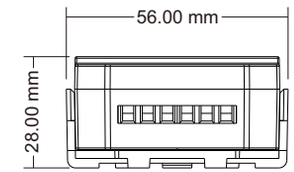

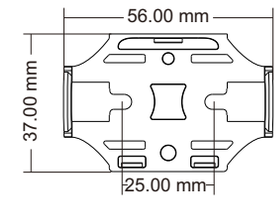

Installation way

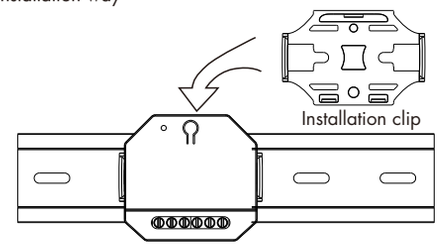

Note:
1. DO NOT install with power applied to device.
2. The installation must be installed or removed by a professional electrician.
3. Please keep the device out of the reach of children.
4. Please keep away from water, humid or hot environment.

Wiring Diagram

⚠ **Caution:** Please carefully ensure all wire connections and polarities are correct and secure before applying power, otherwise this controller will be damaged.

- DT-C connect with DALI master

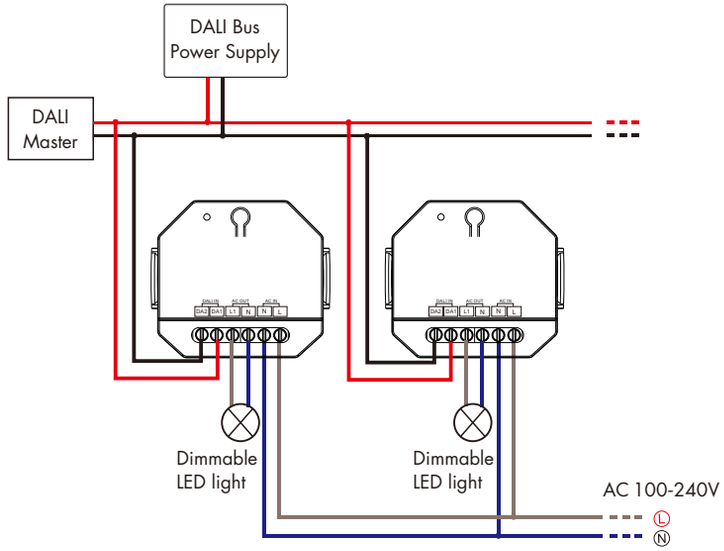

- DT-C connect with AC push switch

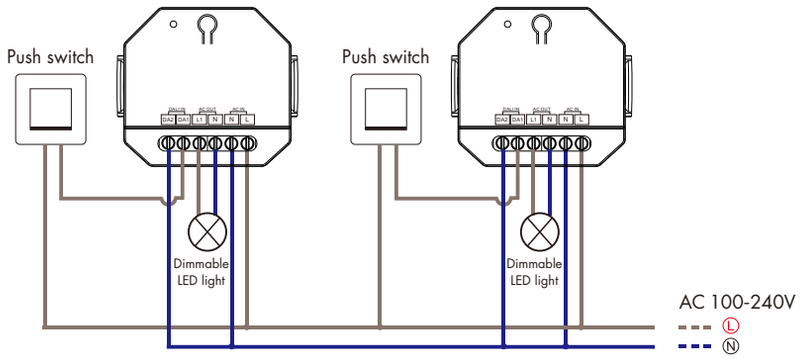

Indicator status:
When the dimmer is working normally, the LED indicator light is green.
When the internal temperature of the dimmer is too high (≥120°C) or the load exceeds maximum power, the LED indicator light is red, after removing the fault, the LED indicator light return green.
When the dimmer receives DALI signal, the LED indicator light flashes once.

Note:
DALI interface and AC PUSH interface are compatible, DALI and AC PUSH can only be connected to one, not at the same time.
When connecting to the AC PUSH switch, note that the fire wire (L) and zero wire (N) are connected to DA1 and DA2 respectively, and cannot be connected to DA1 or DA2 at the same time.

Leading Edge or Trailing Edge Dimming Setting

Select leading edge(forward-phase) dimmer or trailing edge(reverse-phase) dimmer according to dimmable LED light or driver.

Forward-phase control dimmer(TRIAC)

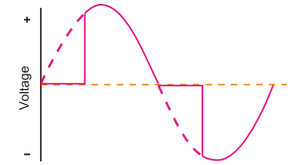

Reverse-phase control dimmer

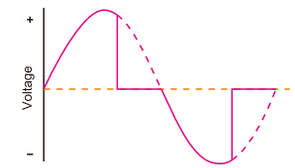

Factory default trailing edge dimming.
Dimming mode can be set by long pressing the set key within 5 seconds of powering up the dimmer:
- Long press the set key for 5 seconds, the LED indicator blinks 3 times means the dimmer is set to trailing edge mode.
- Long press the set key for 10 seconds, the LED indicator blinks 5 times means the dimmer is set to leading edge mode.

Minimum Brightness Setting

The minimum brightness of the device can be set or deleted by press the Min brightness set key on the dimmer.

- Recall minimum brightness:
Short press the Min brightness set key on the dimmer, LED indicator flash one, the light output the minimum brightness.

- Setting minimum brightness:
Adjust the brightness to a desired minimum level, then press and hold down the Min brightness set key 2s until the LED indicator flash one, the current brightness is set as the minimum brightness.
The light can only be dimmable between this minimum brightness and maximum brightness.

- Delete minimum brightness:
Adjust the brightness to maximum level, then press and hold down the Min brightness set key 2s until the LED indicator flash one, the minimum brightness setting is deleted.

Push-Dim Function

The provided Push-Dim interface allows for a simple dimming method using commercially available non-latching(momentary) wall switchs.

- Short press:
  Turn on or off light.
- Long press (1-6s):
  Press and hold to step-less dimming,
  With every other long press, the light level goes to the opposite direction.
- Dimming memory:
  Light returns to the previous dimming level when switched off and on again, even at power failure.
- Synchronization:
  If more than one controller are connected to the same push switch, do a long press for more than 10s,then the system is synchronized and all lights in the group dim up to 100%.
  This means there is no need for any additional synchrony wire in larger installations.
  We recommend the number of controllers connected to a push switch does not exceed 25 pieces, The maximum length of the wires from push to controller should be no more than 20 meters.

DALI Address Assigned by DALI Masters

DALI address can also be assigned by DALI Master controller automatically.
Please refer to user manuals of compatible DALI Masters for specific operations.

Safety & Warnings

- DO NOT install with power applied to device.
- DO NOT expose the device to moisture.