DIM/CCT/RGB/RGBW/RGB+CCT

V5-KX

Knob + RF Dimming 5-channel LED Controller

CE RoHS

Features

- Knob dimming 5-in-1 LED controller, 5 channel constant-voltage output, suitable for single color, color temperature, RGB, RGBW, RGB+CCT LED strips.
- The digital display shows, supports knob adjustment for brightness, color temperature and RGB color.
- 4-bit DIP switch set 8 light types (DIM/CCT1/CCT2/RGB/RGBW/RGB+W/RGBCCT/RGB+CCT) and 2 output PWM frequencies (2KHz, 8KHz).
- Match with RF 2.4G single-zone or multi-zone remote control optional.
- When control RGB/RGBW/RGB+CCT light, can run the built-in 10 dynamic modes by the RF remote control.
- Light on/off fade time 3s selectable.
- Connect an external self-resetting switch to enable on/off and 0–100% dimming functions.

Technical Parameters

Input and Output	
Input voltage	12-48VDC
Input current	30.5A Max.
Input current	5x(12-48)VDC
Output current	5x6A@12/24VDC 5x5A@36/48VDC
Output power	5x72W@12V, 5x144W@24V 5x180W@36V, 5x240W@48V
Output type	Constant voltage
Warranty and Protection	
Warranty	5 years
Protection	Reverse polarity, Over-heat, Short circuit protection

Dimming data	
Input signal	Knob+RF 2.4GHz+Push Dim
Control distance	20m(Barrier-free space)
Dimming gray scale	4096 (2^12) levels
Dimming range	0-100%
Dimming curve	Linear/Logarithmic
PWM frequency	2KHz(default)/8KHz
Package	
Size	W140 x L75 x H50mm
Gross weight	0.338kg

Safety and EMC	
EMC standard	EN IEC 55015/ EN IEC 61547 ETSI EN 301 489-1/-3
Safety standard	EN 61347-1/-2
Radio equipment	ETSI EN 300 440
Certification	CE RoHS
Environment	
Operation temperature	Ta: -20°C ~ +50°C
Case temperature(Max.)	Tc: +72°C
IP rating	IP20

Mechanical Structures and Installations

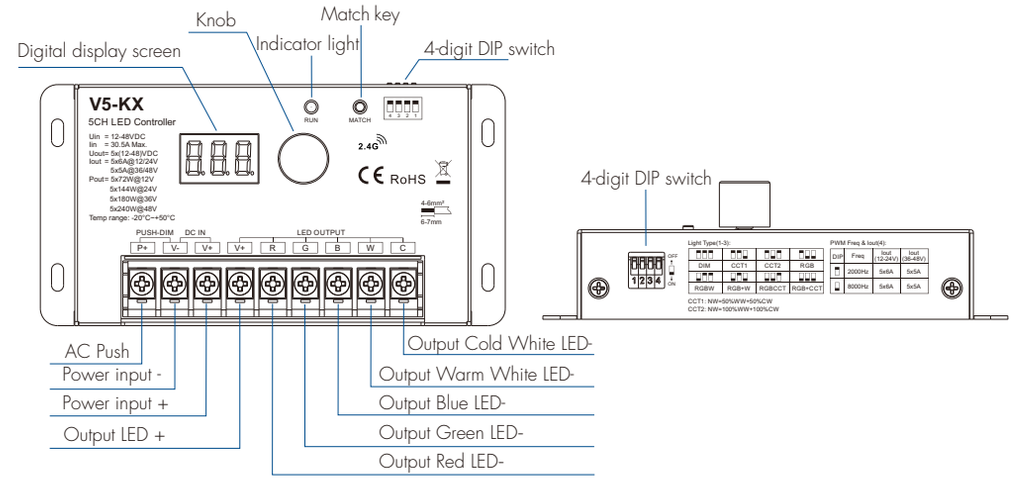

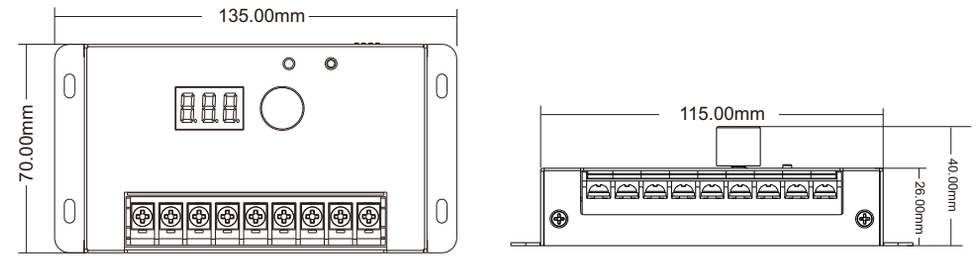

Wiring Diagram

- For RGBCCT(DIP switch 1-3 set to ▭▭▭ or ▭▭▭)

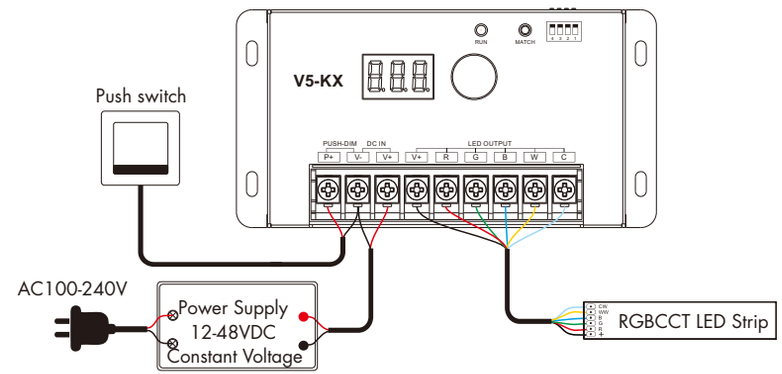

● For RGBW(DIP switch 1-3 set to or)

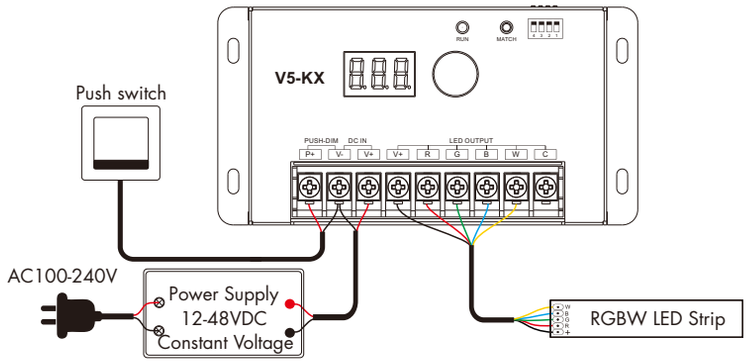

● For RGB(DIP switch 1-3 set to)

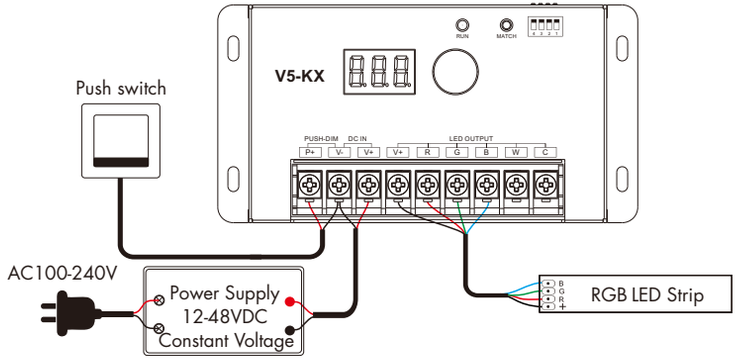

● For CCT(DIP switch 1-3 set to or)

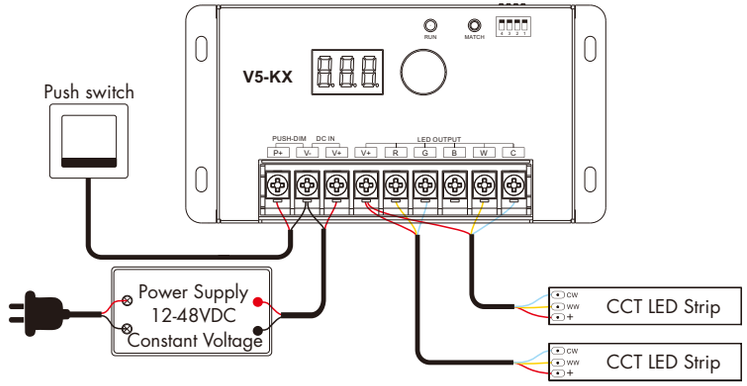

● For DIM(DIP switch 1-3 set to)

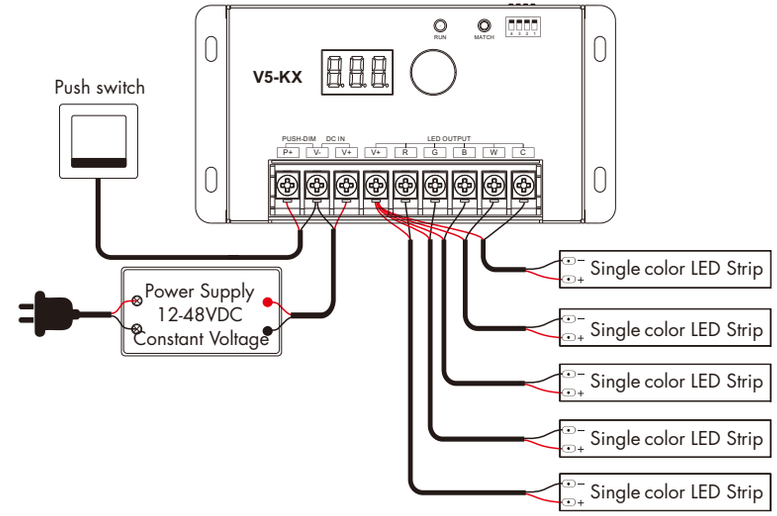

Push Switch Dim Function

Short press: Turn on or off light.

Long press (1-6s): Press and hold to step-less dimming, With every other long press, the light level goes to the opposite direction.

Dimming memory: Light returns to the previous dimming level when switched off and on again, even at power failure.

Synchronization: If more than one controller are connected to the same push switch, do a long press for more than 10s, then the system is synchronized and all lights in the group dim up to 100%.
We recommend the number of controllers connected to a push switch does not exceed 25 pieces, the maximum length of the wires from push to controller should be no more than 20 meters.

DIP Switch Setting

● DIP switch 1-3 set light type

1 2 3 on				
light type	DIM	CCT1	CCT2	RGB
1 2 3 on				
light type	RGBW	RGB+W	RGBCCT	RGB+CCT

● DIP switch 4 set PWM frequency

4 on		
PWM frequency	2KHz	8KHz
Output current (12 - 24V)	5x6A	5x5A
Output current (36 - 48V)	5x6A	5x5A

Notes:
CCT1 light type: NW=50%WW+50%CW
CCT2 light type: NW=100%WW+100%CW
RGBW light type: The RGB channel and the W channel cannot be turned on at the same time.
RGB+W light type: The RGB channel and the W channel can be turned on at the same time.
RGBCCT light type: The RGB channel and the CCT channel cannot be turned on at the same time, NW=100%WW+100%CW.
RGB+CCT light type: The RGB channel and the CCT channel can be turned on at the same time, NW=50%WW+50%CW.

Default settings: RGBCCT light type; 2 kHz PWM frequency.

Knob Functions

● DIM light type

Short press: Turn on/off the light, when the light is turned off, the digital display shows "OFF".
Double click: Switch between 10% and 100% brightness.
Rotation: Adjust brightness, brightness range 1–100% (5 turns), the digital display shows "001"-"100".

Brightness(100%)

Turn off the lights

● CCT light type

Short press: Turn on/off the light, when the light is turned off, the digital display shows "OFF".
Double click: Sequentially switch 3 levels color temperature (Warm White - Neutral white - Cool White),
at the same time enter knob adjust color temperature state.
After 5s of no operation, automatically return to knob adjust brightness state.
Rotation: When knob adjust brightness, brightness range 1–100% (5 turns),
the digital display shows "001"-"100".
When knob adjust color temperature,
color temperature range 2700K-6500K (2 turns),
the digital display shows "c27"-"c65".
Adjust brightness by default.

Brightness(100%) Color temperature 6500K (c27-c65)

● RGB light type

Short press: Turn on/off the light, when the light is turned off, the digital display shows "OFF".
Double click: Switch between color light and mixed white light
(mixed white light defaults to current color + 50% saturation).
At the same time enter knob adjust color or color saturation state.
After 5s of no operation, automatically return to knob adjust brightness state.
Rotation: When knob adjust brightness, brightness range 1–100% (5 turns),
the digital display shows "001"-"100".
When knob adjust color, 60 colors total (3 turns),
the digital display shows "C01"-"C60".
When knob adjust color saturation,
saturation range 0-100 (5 turns),
the digital display shows "A00"-"A99"-"AFF".
Adjust brightness by default.

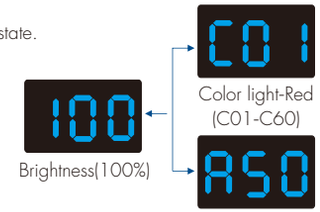

Brightness(100%) Color light-Red (C01-C60) Saturation50% (A00-A99-AFF)

● RGBW light type

Short press: Turn on/off the light, when the light is turned off, the digital display shows "OFF".
Double click: Switch between color light and white light,
at the same time enter knob adjust color light and white light brightness state.
After 5s of no operation,
automatically return to the knob to adjust the brightness state.
Rotation: When knob adjust brightness, brightness range 1–100% (5 turns),
the digital display shows "001"-"100".
When knob adjust RGB color, 60 colors total (3 turns),
the digital display shows "C01"-"C60".
When knob adjust white light brightness, brightness range 1-100 (5 turns),
the digital display shows "401"-"499"-"4FF".
Adjust the brightness by default.

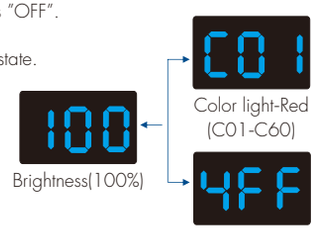

Brightness(100%) Color light-Red (C01-C60) White light brightness100% (401-499-4FF)

● RGB+W light type

Short press: Turn on/off the light, when the light is turned off, the digital display shows "OFF".
Double click: Switch between the 3 modes of color light, white light,
and color light + white light in sequence, at the same time enter knob
adjust color light or white light brightness state.
After 5s of no operation, automatically return to the knob
to adjust the brightness state.
Rotation: When knob adjust brightness, brightness range 1–100% (5 turns),
the digital display shows "001"-"100".
In color light mode, when knob adjust RGB color, 60 colors total (3 turns),
the digital display shows "C01"-"C60".
In white light and color light + white light mode,
when knob adjust white light brightness, brightness range 1–100% (5 turns),
the digital display shows "401"-"499"-"4FF".
Adjust the brightness by default.
Note: When adjusting white light brightness in color light + white light mode, the brightness value will flash.

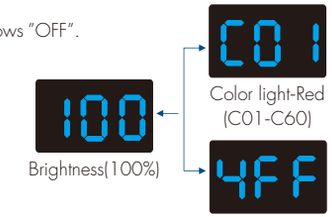

Brightness(100%) Color light-Red (C01-C60) White light brightness100% (401-499-4FF)

● RGBCCT light type

Short press: Turn on/off the light, when the light is turned off, the digital display shows "OFF".
Double click: Switch between color light and color temperature,
at the same time enter knob adjust color light and color temperature state.
After 5s of no operation,
automatically return to the knob to adjust the brightness state.
Rotation: When knob adjust brightness, brightness range 1–100% (5 turns),
the digital display shows "001"-"100".
When knob adjust RGB color, 60 colors total (3 turns),
the digital display shows "C01"-"C60".
When knob adjust color temperature, color temperature range
2700K-6500K (2 turns), the digital display shows "c27"-"c65".
Adjust the brightness by default.

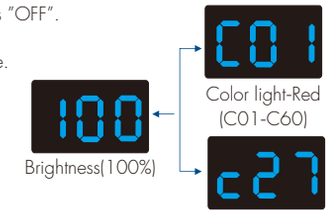

Brightness(100%) Color light-Red (C01-C60) Color temperature 2700K (c27-c65)

● RGB+CCT light type

Short press: Turn on/off the light, when the light is turned off, the digital display shows "OFF".
Double click: Switch between the 3 modes of color light, color temperature, and color light + color temperature in sequence,
at the same time enter knob adjust color light /color temperature state.
After 5s of no operation, automatically return to the knob to adjust the brightness state.
Rotation: When knob adjust brightness, brightness range 1–100% (5 turns),
the digital display shows "001"-"100".
In color light mode, when knob adjust RGB color, 60 colors total (3 turns),
the digital display shows "C01"-"C60".
In color temperature and color light + color temperature mode,
when knob adjust the color temperature,
color temperature range 2700K-6500K (2 turns),
the digital display shows "c27"-"c65".
Adjust the brightness by default.
Note: When adjusting color temperature in color light + color temperature mode,
the color temperature value will flash.

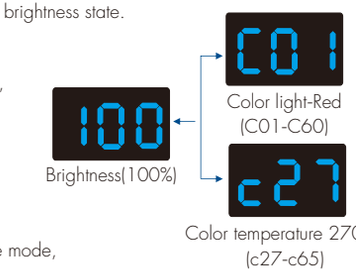

Brightness(100%) Color light-Red (C01-C60) Color temperature 2700K (c27-c65)

Color light adjustment range:

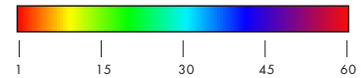

Light On/Off Fade Time

Long press match key 10s, then release the match key, the digital display shows"RES",
restore factory default parameter.
Long press match key 15s, the indicator light blink 3 times, the light on/off time will be set to 3s.
Factory default settings: the light on/off time set to 0.5s; no remote control matched.

Match RF Remote Control

There are two ways to match/delete:

Use match key:

Match:
Press and hold match key, the digital display “RLS”, enter the remote control matching state.
Immediately press on/off key (single zone remote) or zone key (multiple zone remote) on the remote, the digital tube displays "RLo", means match is successful.

Delete:
Press and hold match key for 5s, delete all matches, the digital display "RLE", means all matched remotes were deleted.

Use Power Restart(Standby):

Match:
Power on, power off, and then repeat again.
Immediately short press on/off key (single zone remote) or zone key (multiple zone remote) 3 times fastly.
The digital display "RLO", means match is successful.

Delete:
Power on, power off, and then repeat again.
Immediately short press on/off key (single zone remote) or zone key (multiple zone remote) 5 times fastly.
The digital display "RLE", means all matched remotes were deleted.

Dynamic Change Mode(Recall by the RF Remote Control)

For RGB/RGBW:

No.	Name	No.	Name
1	RGB jump	6	RGB fade in and out
2	RGB smooth	7	Red fade in and out
3	6 color jump	8	Green fade in and out
4	6 color smooth	9	Blue fade in and out
5	Yellow cyan purple smooth	10	White fade in and out

For RGB+CCT:

No.	Name	No.	Name
1	RGB jump	6	RGB fade in and out
2	RGB smooth	7	Red fade in and out
3	6 color jump	8	Green fade in and out
4	6 color smooth	9	Blue fade in and out
5	Color temperature smooth	10	White fade in and out

Note: When using the RF remote control to switch dynamic mode 1-10, the digital display shows "P01" to "P10".

Dimming Curve

CCT dimming curve

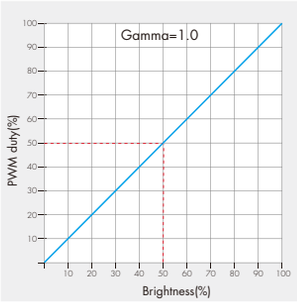

DIM/RGB/RGBW/RGB+CCT dimming curve

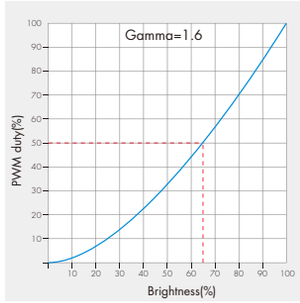

TC Point Location

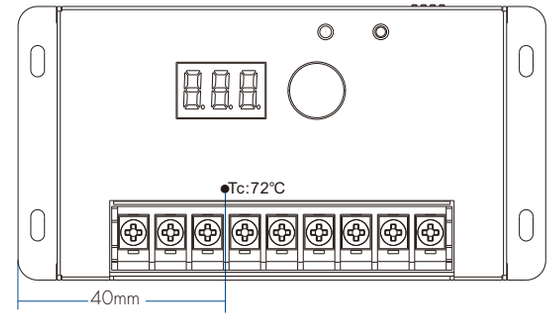

Malfunctions Analysis & Troubleshooting

Malfunctions	Causes	Troubleshooting
No light	1. No power. 2. Wrong connection or insecure.	1. Check the power. 2. Check the connection.
Wrong color	Wrong connection of R/G/B/WW/CW wires.	Reconnect R/G/B/WW/CW wires.
Uneven intensity between front and rear,with voltage drop	1. Output cable is too long. 2. Wire diameter is too small. 3. Overload beyond power supply capability. 4. Overload beyond controller capability	1. Reduce cable or loop supply. 2. Change wider wire. 3. Replace higher power supply. 4. Add power repeater.
No response from the remote	1. The battery has no power. 2. Beyond controllable distance. 3. The controller did not match the remote	1. Replace battery. 2. Reduce remote distance. 3. Re-match the remote.

Installation Precautions

1. The products shall not be stacked, the distance should be ≥ 20cm, so as not to affect lifespan of the products due to poor heat dissipation.
2. The product shall not be installed close to the switching power supply with an interval of ≥ 20cm to avoid radiation interference of the switching power supply.
3. The installation height shall be ≥ 1m from the Hoor to avoid shortening the remote control distance due to too weak reception signal.
4. The products are not allowed to be close to or covered by metal objects, with an interval of ≥ 20cm to avoid signal attenuation and shorten the remote distance.
5. Avoid installation at the corner of the wall or the corner of the beam, with an interval of ≥ 20cm to avoid signal interference.